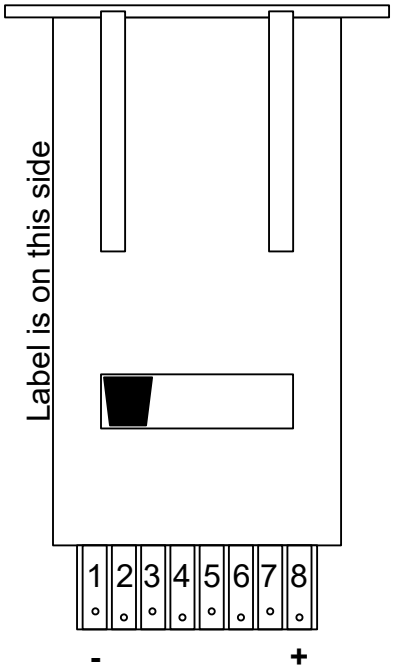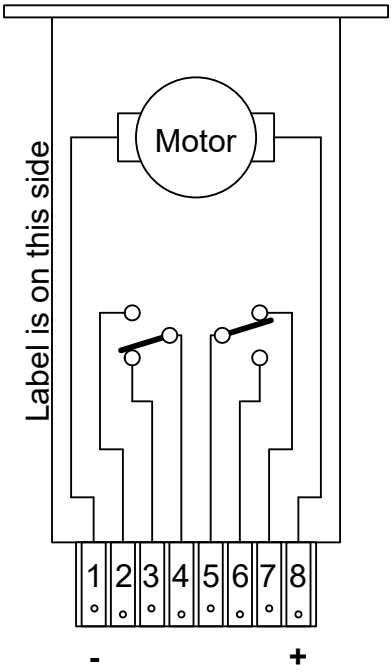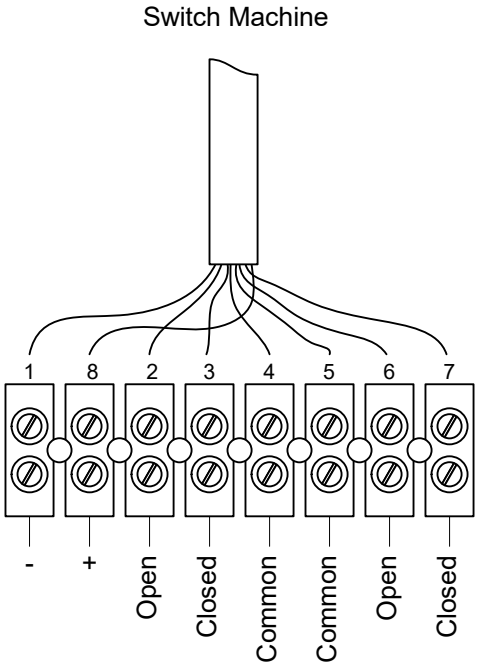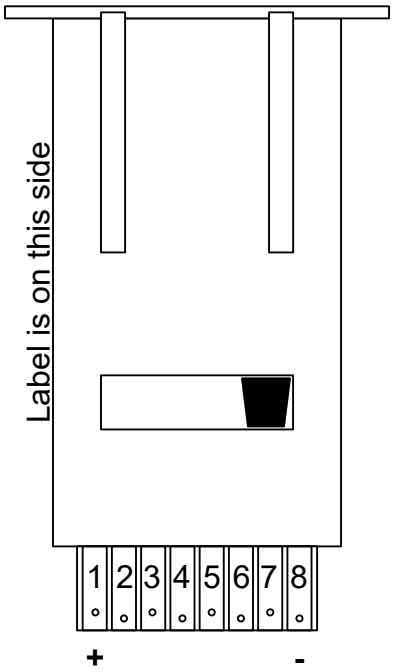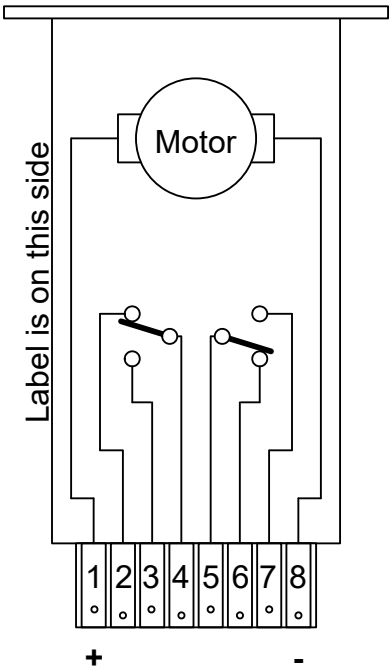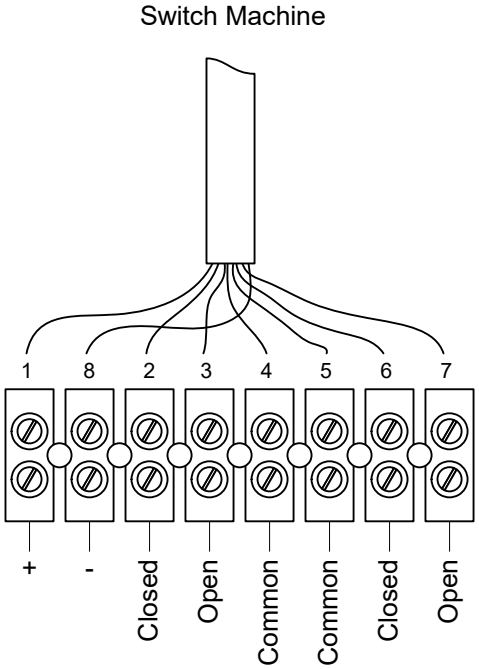Hornell Model Railroad Club - Depot Layout
Tortoise Information